CHANGES			
SYM.	BY	REVISION	DATE

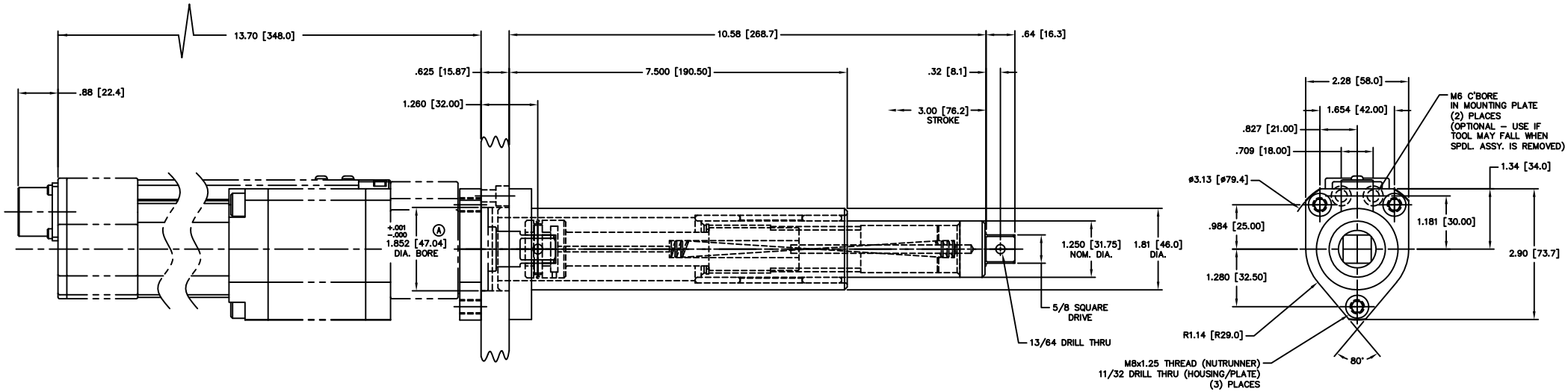

SPINDLE ASSEMBLY WEIGHT (SPDL. ASSY ONLY): 3.7LB

TOLERANCE UNLESS OTHERWISE SPECIFIED

INCH	METRIC
.XX=±.01	.X=±.25
.XXX=±.005	.XX=±.127
.XXXX=±.0005	.XXX=±.0127
ANGLE=±.5°	ANGLE=±.5°

BREAK ALL SHARP CORNERS &
EDGES EXCEPT AS NOTED
DO NOTE SCALE DRAWING

NOTICE OF PROPRIETARY RIGHTS

The design concepts and engineering detail embodied in this drawing are the property of MC Machinery Systems, Inc. and are to be maintained in strict confidence; no element or detail of this drawing is to be disclosed nor used without the express written permission of MC Machinery Systems, Inc.

MC MACHINERY SYSTEMS, INC.

a subsidiary of Mitsubishi Corporation

Web: www.mcmachinery.com Phone: (630) 860-4210 Fax: (630) 860-1872

DES.BY	DET.BY	TITLE
MMS	MMS	STRAIGHT SPINDLE ADAPTOR CFT-202RS3-S/SL
CHK.BY	SAFETY OK	
DATE 11/24	SCALE FULL	
SHEET 1	SHEETS 1	DRAWING NO. SA-3S3-3-62-62