CHANGES			
SYM.	BY	REVISION	DATE
–	PAG	TRANSLATED TO ENGLISH	02/18/19

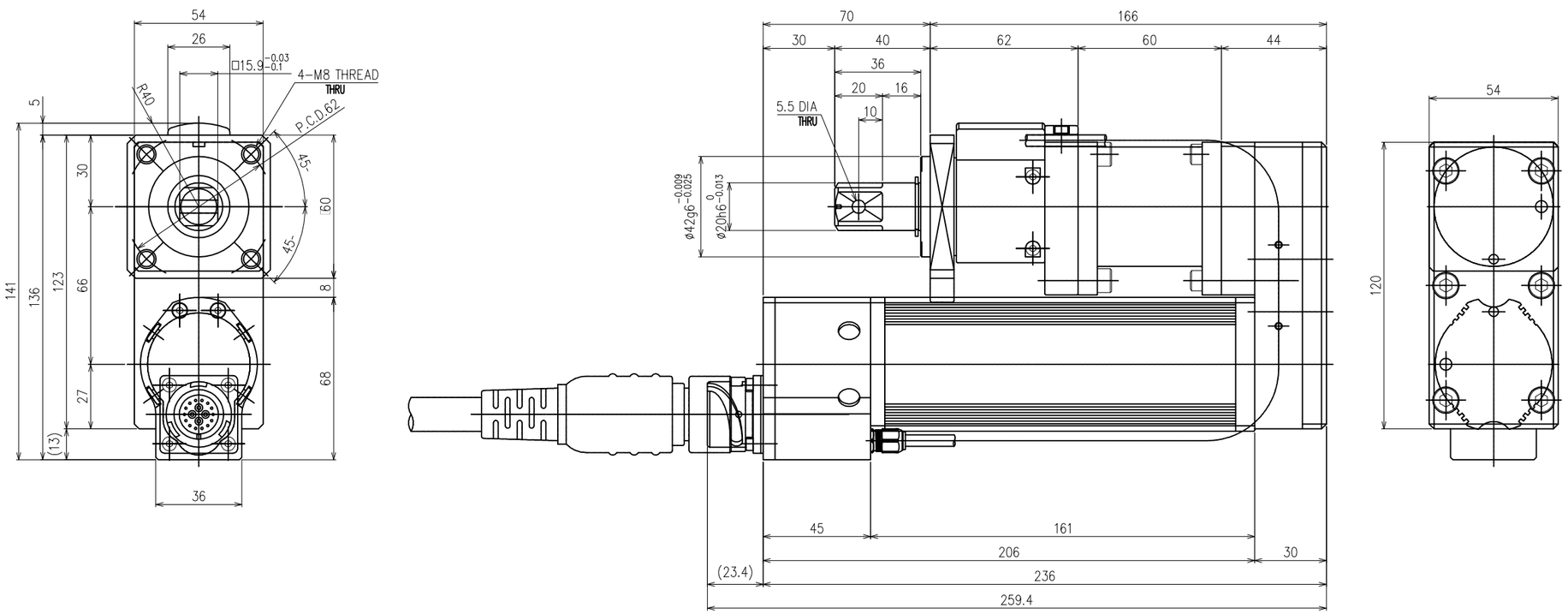

CFT−162RS3−SU (−X16001)		
Max. Torque	Nm	160 ※1
Applicable Torque Range	N・m	32~144
Max. Speed	r.p.m	478
Weight	kgf	4.86

※1) 150Nm: If less than 15sec (cycle to cycle)

TOLERANCE UNLESS OTHERWISE SPECIFIED

INCH	METRIC
.XX=±.01	.X=±.25
.XXX=±.005	.XX=±.127
.XXXX=±.0005	.XXX=±.0127
ANGLE=±.5°	ANGLE=±.5°

BREAK ALL SHARP CORNERS & EDGES EXCEPT AS NOTED
DO NOTE SCALE DRAWING

NOTICE OF PROPRIETARY RIGHTS

The design concepts and engineering detail embodied in this drawing are the property of FEC INC. and are to be maintained in strict confidence; no element or detail of this drawing is to be disclosed nor used without the express written permission of FEC INC.

AMT	SYM	SHT	NAME	PART #	MFG.

FEC INC FASTENING AUTOMATION www.fec−usa.com

DES.BY	DET.BY	TITLE TOOL ASSEMBLY DRAWING FOR A CFT−162RS3−SU TOOL
CHK.BY	SAFETY OK	
DATE 02/18/19	SCALE FULL	REF DDK DWG. 14T−16001
SHEET	SHEETS	DRAWING NO. CFT−162RS3−SU